MODEL S245

Formed Steel Louver ▲ 2″ Deep ▲ 45° Straight Blades ▲ Stationary ▲ Galvanized Steel

STANDARD MATERIALS AND CONSTRUCTION

FRAME: 18-GA. galvanized steel, channel or flanged type.
BLADE: 18-GA. galvanized steel. Blades approximately 2⅛” on centers.
SCREEN: (When indicated)
½” mesh, 19-GA. galvanized steel (.041”).
CONSTRUCTION: Riveted and/or welded for maximum service.

OPTIONS

Frames and Blades of other gauges
Material - 304 or 316 Stainless steel, Copper, Aluminum, etc.
Finishes - Enamels, Epoxies, etc.
Screens - Insect screen 18/16 aluminum mesh.
-or- ½” flattened aluminum, .051”,
-or- ¼” sq. mesh, 18-GA galvanized steel, .047”,
-or- ½” sq. mesh, 18-GA stainless steel, .047”,
Others available.

NOTES

1. ½” nominal deduction will be made to the opening size given.
2. Approximate shipping weight is 5.0 lbs./sq.ft.

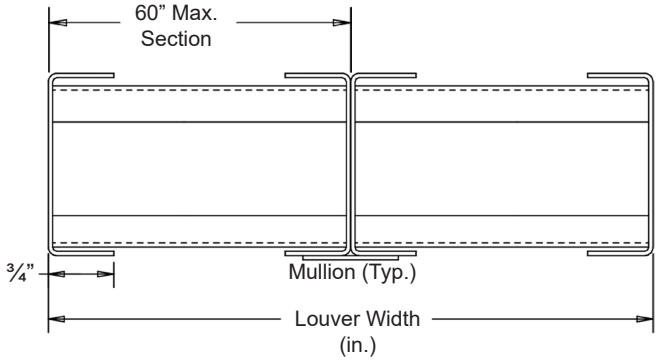

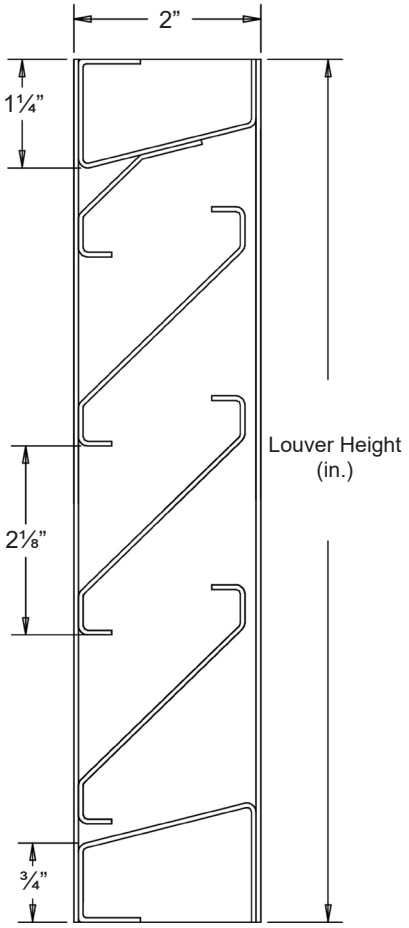

Not to scale.

Flange Frame Available

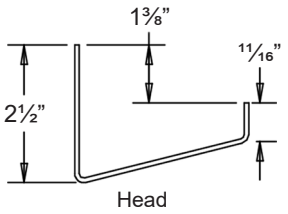

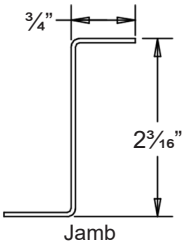

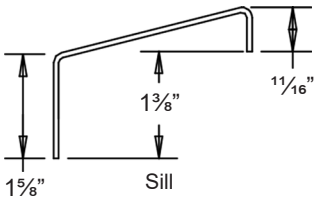

Item #	**Qty**	Width	Height	Width	Height	**Mullion**	Type	Location		
		Opening Size		**Louver Size**			**Screens**			**Union Made**
Arch. / Eng. :						**EDR:**		**ECN:**		**Job:**
Contractor:										
Project:						**Date:**		**DWN:**		**DWG:**

air balance
Dampers Louvers
UL Life Safety Products
Division of Mestek
Member of AMCA
airbalance.com

In the interest of product development, Air Balance reserves the right to make changes without notice.

450 Riverside Dr • Wyalusing PA, 18853 • Phone 570-746-1888 • Fax 570-746-9286